

180W

INDUCTION SPEED CONTROL MOTOR
□90㎜ CONNECTOR TYPE

SIZE mm sq.	Motor Type	Controller Type	Poles	Output	Voltage	Freq.	Duty	Speed Range	Permissible Torque at 1200rpm		Permissible Torque at 90rpm		Starting Torque		Cap.
				(W)	(V)	(Hz)		(rpm)	(kg-cm)	(N-m)	(kg-cm)	(N-m)	(kg-cm)	(N-m)	(μF)
90	S9I180GB( )-V12 S9I180GB( )-V12(TP) S9I180GB( )-V12CE	SUA180IB-V12	4	180	1 Ø 220	60	Cont.	90-1700	7.72	0.772	4.25	0.425	6.45	0.645	7.0

❖ 기종명 맨 끝자리에 CE가 명기된 MOTOR MODEL의 인증 관련 내용은 SPG 규격 인증품 현황을 참고하여 주십시오. (CE marked at the end of motor model name indicates that it is impedance protected type which has received CE.)
❖ 기종명 맨 끝자리에 (TP)가 명기된 MOTOR MODEL은 일반 MOTOR의 TP가 내장된 THERMALLY PROTECTED TYPE입니다. (TP marked at the end of the motor model name indicates that it is standard motor with Thermal Protector mounted.)
❖ 'H' Type 전용으로 기종명에 표시하지 않습니다. (Only "H" type is applicable. Please use "H" type motor.)

50Hz

MODEL \ GEAR RATIO		3	3.6	5	6	7.5	9	10	12.5	15	18	20	25	30	36	40	50	60	75	90	100	120	150	180	200
	rpm	500	416	300	250	200	166	150	120	100	83	75	60	50	41	37	30	25	20	16	15	12	10	8	7.5
S9KH□B	kg-cm	34.0	41.0	57.0	68.0	85.1	102	113	128	153	184	204	230	278	300	300	300	300	300	300	300	300	300	300	300
	N·m	3.336	4.021	5.590	6.672	8.341	10.01	11.12	12.55	15.01	18.04	20.02	22.56	27.26	29.42	29.42	29.42	29.42	29.42	29.42	29.42	29.42	29.42	29.42	29.42

60Hz

MODEL \ GEAR RATIO		3	3.6	5	6	7.5	9	10	12.5	15	18	20	25	30	36	40	50	60	75	90	100	120	150	180	200
	rpm	600	500	360	300	240	200	180	144	120	100	90	72	60	50	45	36	30	24	20	18	15	12	10	9
S9KH□B	kg-cm	28.1	34.0	47.0	57.0	71.0	84.2	94.0	105	126	152	168	189	227	273	300	300	300	300	300	300	300	300	300	300
	N·m	2.756	3.334	4.609	5.590	6.963	8.257	9.218	10.30	12.39	14.91	16.51	18.58	22.29	26.75	29.42	29.42	29.42	29.42	29.42	29.42	29.42	29.42	29.42	29.42

❖ GEAR HEAD 품명 중 □은 감속비를 표시합니다. (The code in □ of gearhead model is for gear ratio.)
❖ GEAR HEAD와 조합한 경우의 허용 TORQUE입니다. (It is the ambient torque of the assembled motor and gearhead.)
❖ 회전방향은 ■색이 MOTOR의 회전방향과 동일방향이고, 기타는 MOTOR 회전방향과 반대방향입니다. (■ color indicates that the output shaft of the geared motor rotates in the same direction as the output shaft of the motor. Others indicate rotation in the opposite direction.)
❖ 회전수는 MOTOR의 동기 회전수(50Hz : 1500rpm, 60Hz : 1800rpm)를 기준으로 하여 감속비로 나누어서 계산하였습니다. 실제의 회전수는 부하의 크기에 따라서 표시된 수치보다 2~20% 적습니다. (Rpm is based on synchronous speed (50Hz: 1500rpm, 60Hz: 1800rpm) divided by gear ratio. The actual rotation speed can be 2~20% less than displayed value depending on the load.)
❖ 'H' Type 전용으로 기종명에 표시하지 않습니다. (Only "H" type is applicable. Please use "H" type motor.)

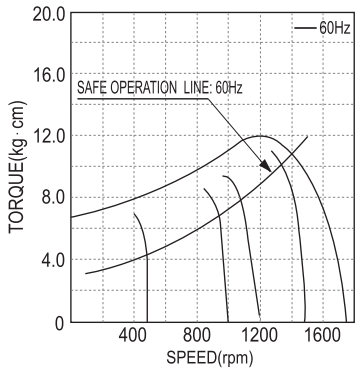

▲ S9I180GB()-V12
S9I180GB()-V12(TP)
S9I180GB()-V12CE

DIMENSIONS

GEARED MOTOR

※MOTOR MODEL : S9I180G□-V12
※HEAD MODEL : S9□H3B~S9□H200B

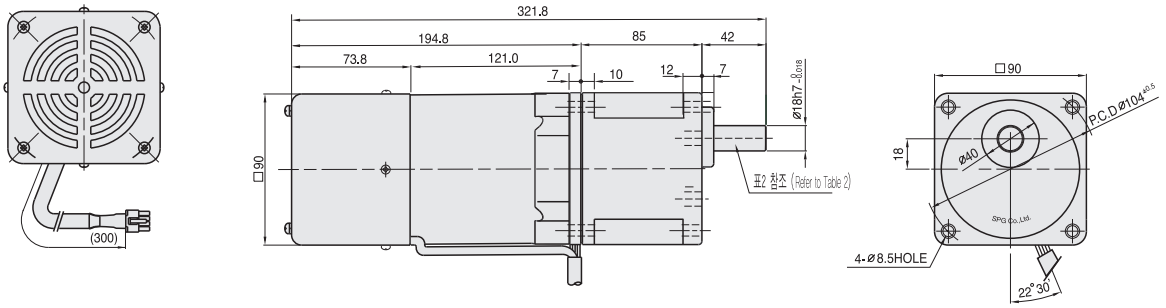

MOTOR

※MOTOR MODEL : S9I180□-V12

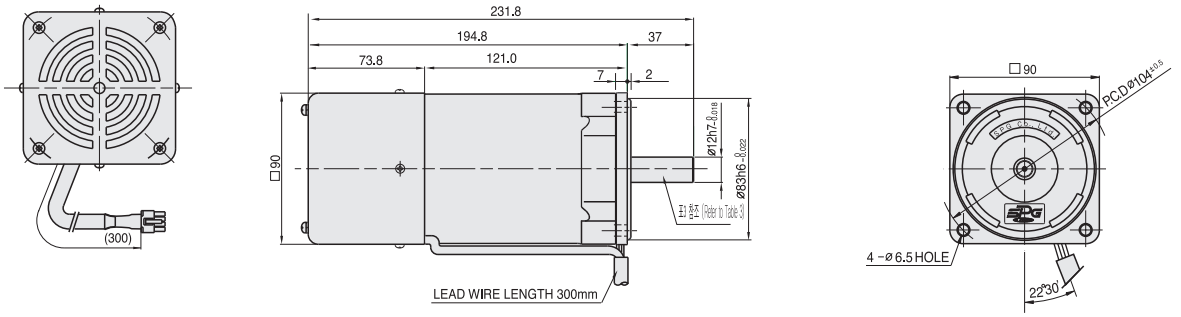

WEIGHT – (표1)

PART		WEIGHT(kg)
MOTOR		4.30
GEAR HEAD	S9□H3B ~S9□H10B	1.65
	S9□H12.5B ~S9□H20B	1.80
	S9□H25B ~S9□H60B	1.90
	S9□H75B ~S9□H200B	1.95

KEY SPEC

GEAR HEAD	MOTOR
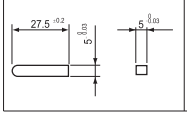	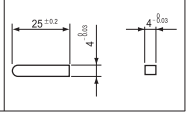

GEAR HEAD 출력축 사양 (SPEC for output shaft of gearhead) – (표2 (Table2))

MODEL	출력축 구분
STRAIGHT TYPE S9SH3B ~S9SH200B	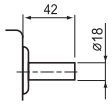
D-CUT TYPE S9DH3B ~S9DH200B	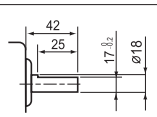
KEY TYPE S9KH3B ~S9KH200B	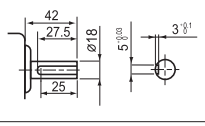

MOTOR 출력축 사양 (SPEC for output shaft of motor) – (표3 (Table3))

MODEL	출력축 구분
GEAR TYPE S9I180G□-V12	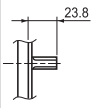
STRAIGHT TYPE S9I180S□-V12	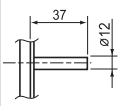
D-CUT TYPE S9I180D□-V12	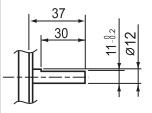
KEY TYPE S9I180K□-V12	