

60W

INDUCTION SPEED CONTROL MOTOR
□90㎜ CONNECTOR TYPE

SIZE mm sq.	Motor Type	Controller Type	Poles	Output (W)	Voltage (V)	Freq. (Hz)	Duty	Speed Range (rpm)	Permissible Torque at 1200rpm (kg-cm)	Permissible Torque at 1200rpm (N-m)	Permissible Torque at 90rpm (kg-cm)	Permissible Torque at 90rpm (N-m)	Starting Torque (kg-cm)	Starting Torque (N-m)	Cap. (μF)
90	S9I60GA( )-V12 S9I60GA( )-V12(TP) S9I60GA( )-V12CE	SUA60IA-V12	4	60	1Ø 110	60	Cont.	90-1700	5.50	0.550	2.00	0.200	5.00	0.500	20.0
	S9I60GB( )-V12 S9I60GB( )-V12(TP) S9I60GB( )-V12CE	SUA60IB-V12	4	60	1Ø 220	60	Cont.	90-1700	5.50	0.550	2.00	0.200	5.00	0.500	5.0
	S9I60GC( )-V12 S9I60GC( )-V12(TP) S9I60GC( )-V12CE	SUA60IC-V12	4	60	1Ø 100	50	Cont.	90-1400	5.50	0.550	1.20	0.120	4.00	0.400	20.0
						60		90-1700	5.00	0.500					
	S9I60GD( )-V12 S9I60GD( )-V12(TP) S9I60GD( )-V12CE	SUA60ID-V12	4	60	1Ø 200	50	Cont.	90-1400	5.50	0.550	1.20	0.120	4.00	0.400	5.0
						60		90-1700	5.00	0.500					
	S9I60GX( )-V12 S9I60GX( )-V12CE	SUA60IX-V12	4	60	1Ø 220	50	Cont.	90-1400	5.20	0.520	0.90	0.090	3.10	0.310	3.5
					1Ø 240				5.80	0.580	0.90	0.090	3.60	0.360	

❖ 기종명 맨 끝자리에 CE가 명기된 MOTOR MODEL의 인증 관련 내용은 SPG 규격 인증품 현황을 참고하여 주십시오. (CE marked at the end of motor model name indicates that it is impedance protected type which has received CE.)
❖ 기종명 맨 끝자리에 (TP)와 명기된 MOTOR MODEL은 일반 MOTOR의 TP가 내장된 THERMALLY PROTECTED TYPE입니다. 또한 기종명 S9I60GX( )-V12, S9I60GX( )-V12CE는 TP가 내장된 THERMALLY PROTECTED TYPE입니다. (TP marked at the end of the motor model name indicates that it is standard motor with Thermal Protector mounted. S9I60GX( )-V12, S9I60GX( )-V12CE is thermally protected type with TP mounted.)
❖ ( )는 L, H Type을 표시합니다. L은 GEAR HEAD의 L과, H는 GEAR HEAD의 H와 사용하여 주십시오. (( ) is for marking 'L' type or 'H'. 'L' should be used with gearhead 'L' and 'H' should be used with gearhead 'H'.)

50Hz

MODEL \ GEAR RATIO		3	3.6	5	6	7.5	9	10	12.5	15	18	20	25	30	36	40	50	60	75	90	100	120	150	180	200
	rpm	500	416	300	250	200	166	150	120	100	83	75	60	50	41	37	30	25	20	16	15	12	10	8	7.5
S9KC□B( )	kg-cm	12.2	14.6	20.3	24.3	30.4	36.5	40.5	45.6	54.8	65.7	73.0	82.5	99.0	119	132	165	198	200	200	200	200	200	200	200
S9KC□B( )-S	N·m	1.196	1.431	1.989	2.381	2.989	3.577	3.969	4.469	5.370	6.439	7.154	8.085	9.702	11.66	12.94	16.17	19.40	19.60	19.60	19.60	19.60	19.60	19.60	19.60

60Hz

MODEL \ GEAR RATIO		3	3.6	5	6	7.5	9	10	12.5	15	18	20	25	30	36	40	50	60	75	90	100	120	150	180	200
	rpm	600	500	360	300	240	200	180	144	120	100	90	72	60	50	45	36	30	24	20	18	15	12	10	9
S9KC□B( )	kg-cm	9.72	11.7	16.2	19.4	24.3	29.2	32.4	36.5	43.8	52.6	58.4	66.0	79.2	95.0	106	132	158	177	200	200	200	200	200	200
S9KC□B( )-S	N·m	0.953	1.147	1.588	1.901	2.381	2.862	3.175	3.577	4.292	5.155	5.723	6.468	7.762	9.310	10.39	12.94	15.48	17.35	19.60	19.60	19.60	19.60	19.60	19.60

❖ GEAR HEAD 품명 중 □은 감속비를 표시합니다. (The code in □ of gearhead model is for gear ratio.)
❖ GEAR HEAD와 조합한 경우의 허용 TORQUE입니다. (It is the permissible torque of the assembled motor and gearhead.)
❖ 감속비 1/10의 중간 GEAR HEAD를 접속한 경우의 허용 TORQUE는 200kg-cm입니다. (The permissible torque of the motor and inter-decimal gearhead is 200 kg-cm.)
❖ 회전방향은 ■색이 MOTOR의 회전방향과 동일방향이고, 기타는 MOTOR 회전방향과 반대방향입니다. (■ color indicates that the output shaft of the geared motor rotates in the same direction as the output shaft of the motor. Others indicate rotation in the opposite direction.)
❖ 회전수는 MOTOR의 동기 회전수(50Hz : 1500rpm, 60Hz : 1800rpm)를 기준으로 하여 감속비로 나누어서 계산하였습니다. 실제의 회전수는 부하의 크기에 따라서 표시된 수치보다 2~20% 적습니다. (Rpm is based on synchronous speed (50Hz: 1500rpm, 60Hz: 1800rpm) divided by gear ratio. The actual rotation speed can be 2~20% less than displayed value depending on the load.)
❖ ( )는 L, H Type을 표시합니다. L은 MOTOR의 L과, H는 MOTOR의 H와 사용하여 주십시오. (( ) is for marking 'L' type or 'H'. 'L' should be used with motor 'L' and 'H' should be used with motor 'H'.)

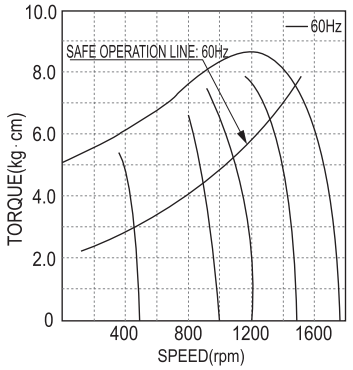

▲ S9I60GA( )-V12 S9I60GB( )-V12
S9I60GA( )-V12(TP) S9I60GB( )-V12(TP)
S9I60GA( )-V12CE S9I60GB( )-V12CE

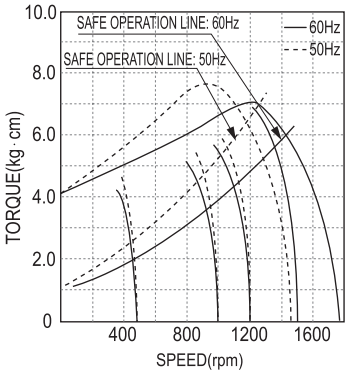

▲ S9I60GC( )-V12 S9I60GD( )-V12
S9I60GC( )-V12(TP) S9I60GD( )-V12(TP)
S9I60GC( )-V12CE S9I60GD( )-V12CE

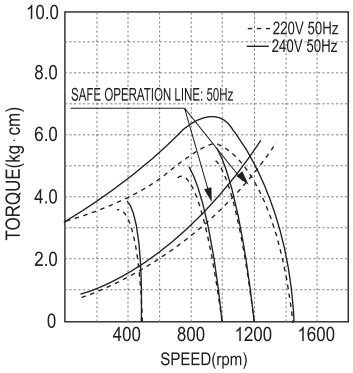

▲ S9I60GX( )-V12
S9I60GX( )-V12CE

DIMENSIONS

✚ GEARED MOTOR

※MOTOR MODEL : S9I60G□□-V12
※HEAD MODEL : S9□C3B□ ~ S9□C200□-S

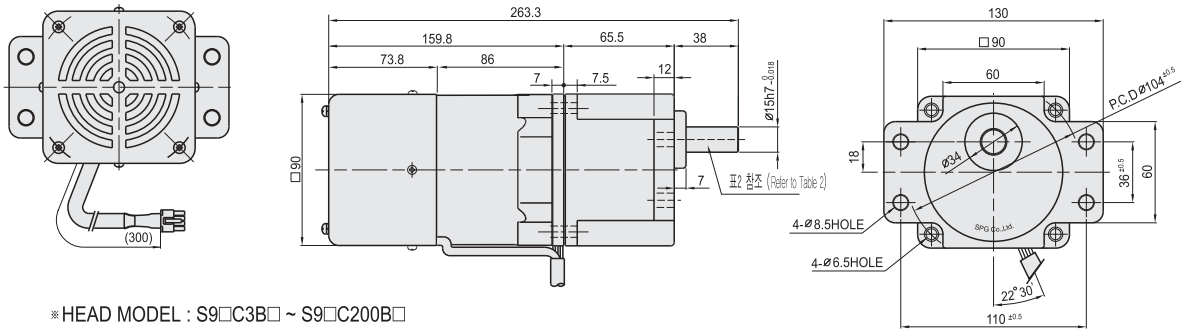

※HEAD MODEL : S9□C3B□ ~ S9□C200B□

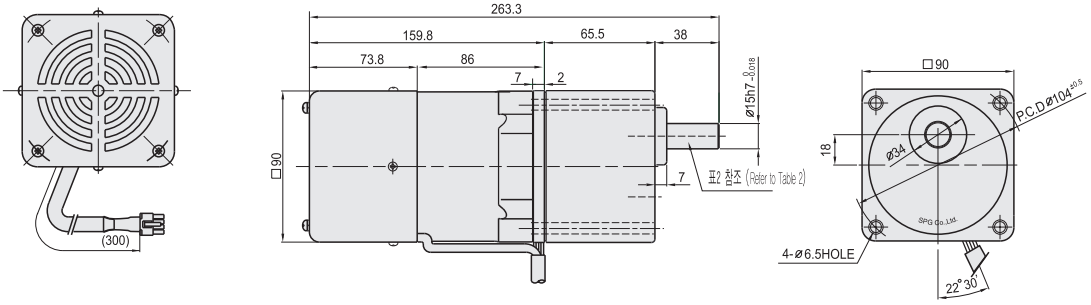

✚ MOTOR

※MOTOR MODEL : S9I60□□□-V12

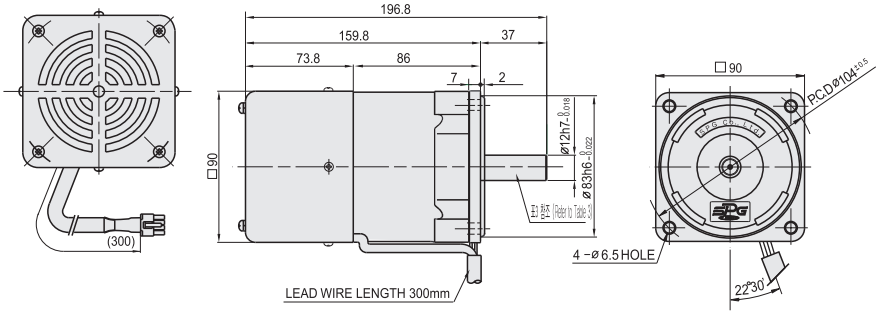

✚ INTER-DECIMAL GEAR HEAD

※MODEL : S9GX10B(H,L)-S

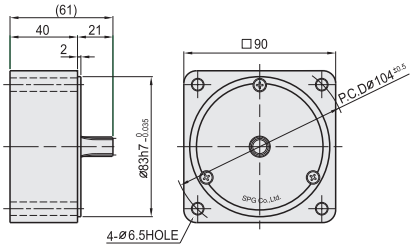

✚ WEIGHT – (표1 (Table1))

PART		WEIGHT(kg)
MOTOR		2.93
DECIMAL GEAR HEAD		0.65
GEAR HEAD	S9□C3B□ ~S9□C10B□	1.21
	S9□C12.5B□ ~S9□C20B□	1.30
	S9□C25B□ ~S9□C60B□	1.40
	S9□C75B□ ~S9□C200B□	1.45

✚ KEY SPEC

GEAR HEAD	MOTOR
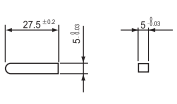	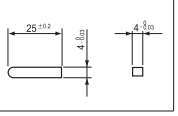

✚ GEAR HEAD 출력축 사양 (SPEC for output shaft of gearhead) – (표2 (Table2))

MODEL	출력축 구분 (TYPES OF OUTPUT SHAFT)
STRAIGHT TYPE S9SC3B□ ~S9SC200B□	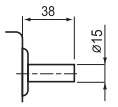
D-CUT TYPE S9DC3B□ ~S9DC200B□	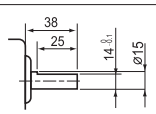
KEY TYPE S9KC3B□ ~S9KC200B□	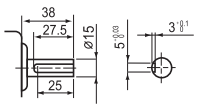

✚ MOTOR 출력축 사양 (SPEC for output shaft of motor) – (표3 (Table3))

MODEL	출력축 구분 (TYPES OF OUTPUT SHAFT)
GEAR TYPE S9I60G□□-V12	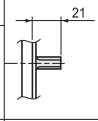
STRAIGHT TYPE S9I60S□-V12	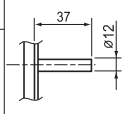
D-CUT TYPE S9I60D□-V12	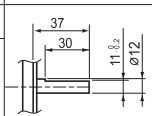
KEY TYPE S9I60K□-V12	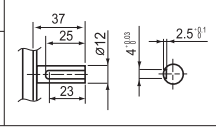

DIMENSIONS

✚ GEARED MOTOR

※MOTOR MODEL : S9I60G□H-V12
※HEAD MODEL : S9□D3B□~S9□D200B

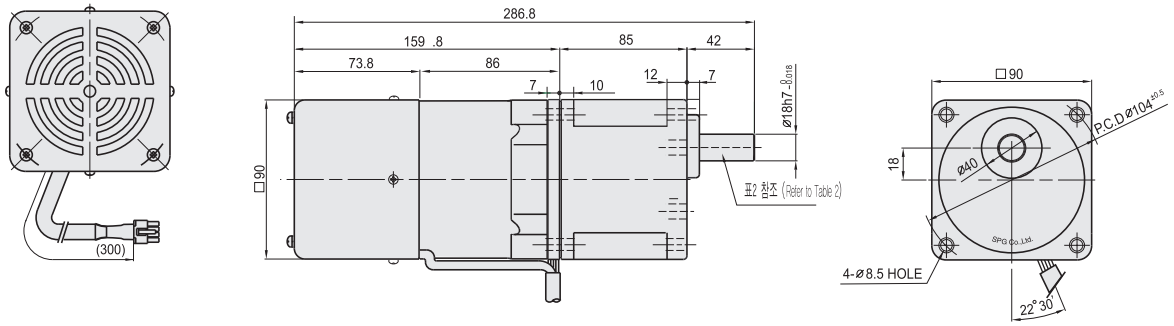

✚ WEIGHT – (표1 (Table1))

PART		WEIGHT(kg)
MOTOR		2.93
GEAR HEAD	S9□D3B ~S9□D10B	1.65
	S9□D12.5B ~S9□D20B	1.80
	S9□D25B ~S9□D60B	1.90
	S9□D75B ~S9□D200B	1.95

✚ KEY SPEC

GEAR HEAD
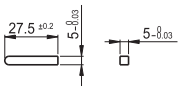

✚ GEAR HEAD 출력축 사양 (SPEC for output shaft of gearhead) – (표2 (Table2))

MODEL	출력축 구분 (TYPES OF OUTPUT SHAFT)
STRAIGHT TYPE	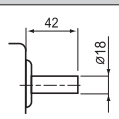
S9SD3B ~S9SD200B	
D-CUT TYPE	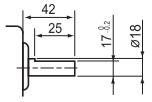
S9DD3B ~S9DD200B	
KEY TYPE	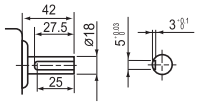
S9KD3B ~S9KD200B	

50Hz

	GEAR RATIO	3	3.6	5	6	7.5	9	10	12.5	15	18	20	25	30	36	40	50	60	75	90	100	120	150	180	200
MODEL	rpm	500	416	300	250	200	166	150	120	100	83	75	60	50	41	37	30	25	20	16	15	12	10	8	7.5
S9KD□B	kg-cm	12.2	14.6	20.3	24.3	30.4	36.5	40.5	45.6	54.8	65.7	73.0	82.5	99.0	119	132	165	198	221	266	295	300	300	300	300
	N·m	1.196	1.431	1.989	2.381	2.989	3.577	3.969	4.469	5.370	6.439	7.154	8.085	9.702	11.66	12.94	16.17	19.40	21.67	26.09	28.93	29.42	29.42	29.42	29.42

60Hz

	GEAR RATIO	3	3.6	5	6	7.5	9	10	12.5	15	18	20	25	30	36	40	50	60	75	90	100	120	150	180	200
MODEL	rpm	600	500	360	300	240	200	180	144	120	100	90	72	60	50	45	36	30	24	20	18	15	12	10	9
S9KD□B	kg-cm	9.72	11.7	16.2	19.4	24.3	29.2	32.4	36.5	43.8	52.6	58.4	66.0	79.2	95.0	106	132	158	177	212	236	283	300	300	300
	N·m	0.953	1.147	1.588	1.901	2.381	2.862	3.175	3.577	4.292	5.155	5.723	6.468	7.762	9.310	10.39	12.94	15.48	17.35	20.79	23.14	27.75	29.42	29.42	29.42

❖ GEAR HEAD 품명 중 □은 감속비를 표시합니다. (The code in □ of gearhead model is for gear ratio.)
❖ GEAR HEAD와 조합한 경우의 허용 TORQUE입니다. (It is the permissible torque of the assembled motor and gearhead.)
❖ 감속비 1/10의 중간 GEAR HEAD를 접속한 경우의 허용 TORQUE는 300kg-cm입니다. (The permissible torque of the motor and inter-decimal gearhead is 300 kg-cm.)
❖ 회전방향은 ■색이 MOTOR의 회전방향과 동일방향이고, 기타는 MOTOR 회전방향과 반대방향입니다. (■ color indicates that the output shaft of the geared motor rotates in the same direction as the output shaft of the motor. Others indicate rotation in the opposite direction.)
❖ 회전수는 MOTOR의 동기 회전수(50Hz : 1500rpm, 60Hz : 1800rpm)를 기준으로 하여 감속비로 나누어서 계산하였습니다. 실제의 회전수는 부하의 크기에 따라서 표시된 수치보다 2~20% 적습니다. (Rpm is based on synchronous speed (50Hz: 1500rpm, 60Hz: 1800rpm) divided by gear ratio. The actual rotation speed can be 2~20% less than displayed value depending on the load.)
❖ 'H' Type 전용으로 기종명에 표시하지 않습니다. MOTOR의 H와 사용하여 주십시오. (Only "H" type is applicable. Please use "H" type motor.)